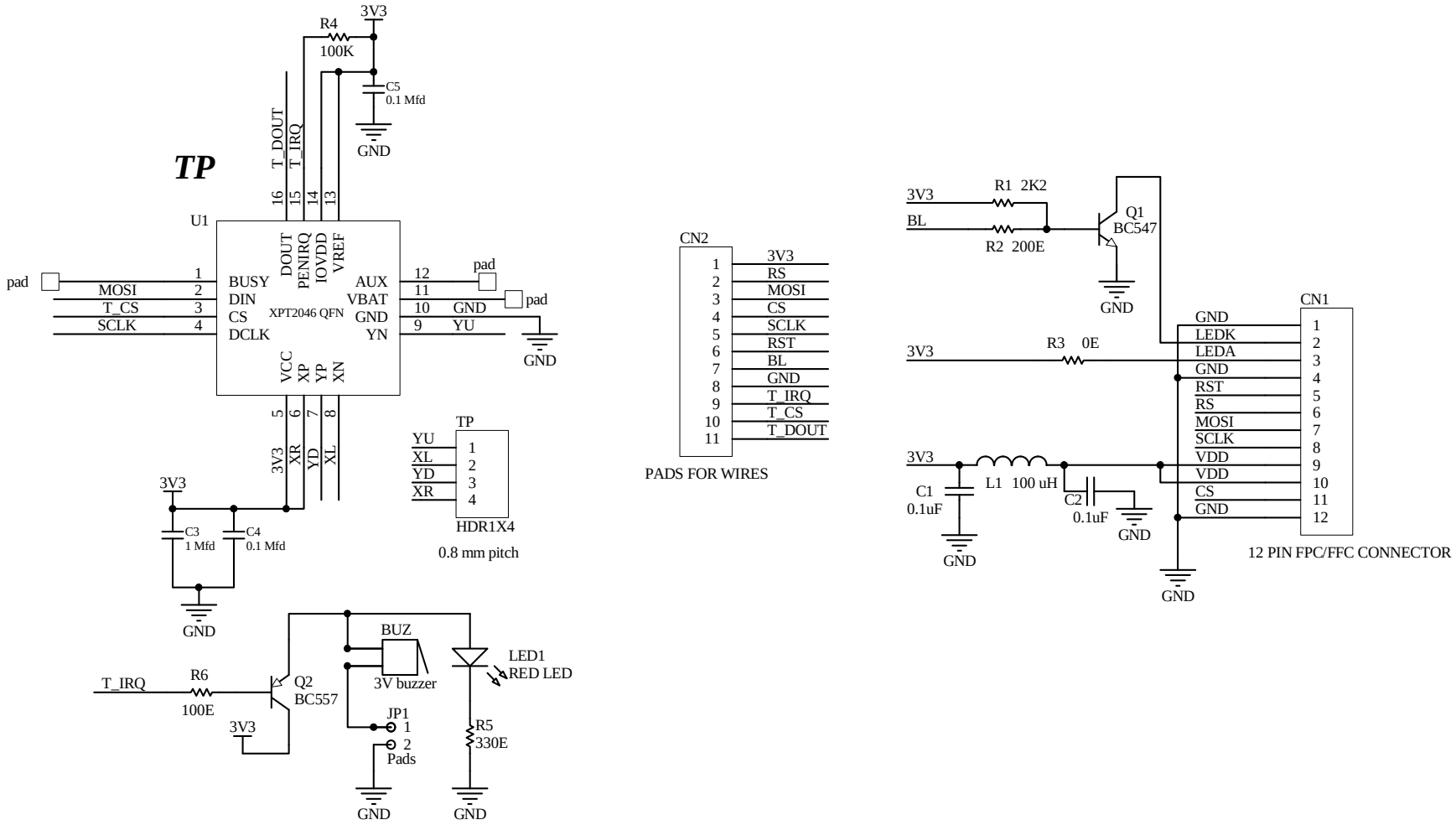

Title		
TL03503200480C_TP		
Size: A	Number: **SR.NO.- 140226**	Revision
Date: 3/15/2014		Sheet 1 of 1
File: E:\Altpcb\..\TL03503200480C_01_sch.SchDoc		Drawn By: PHP